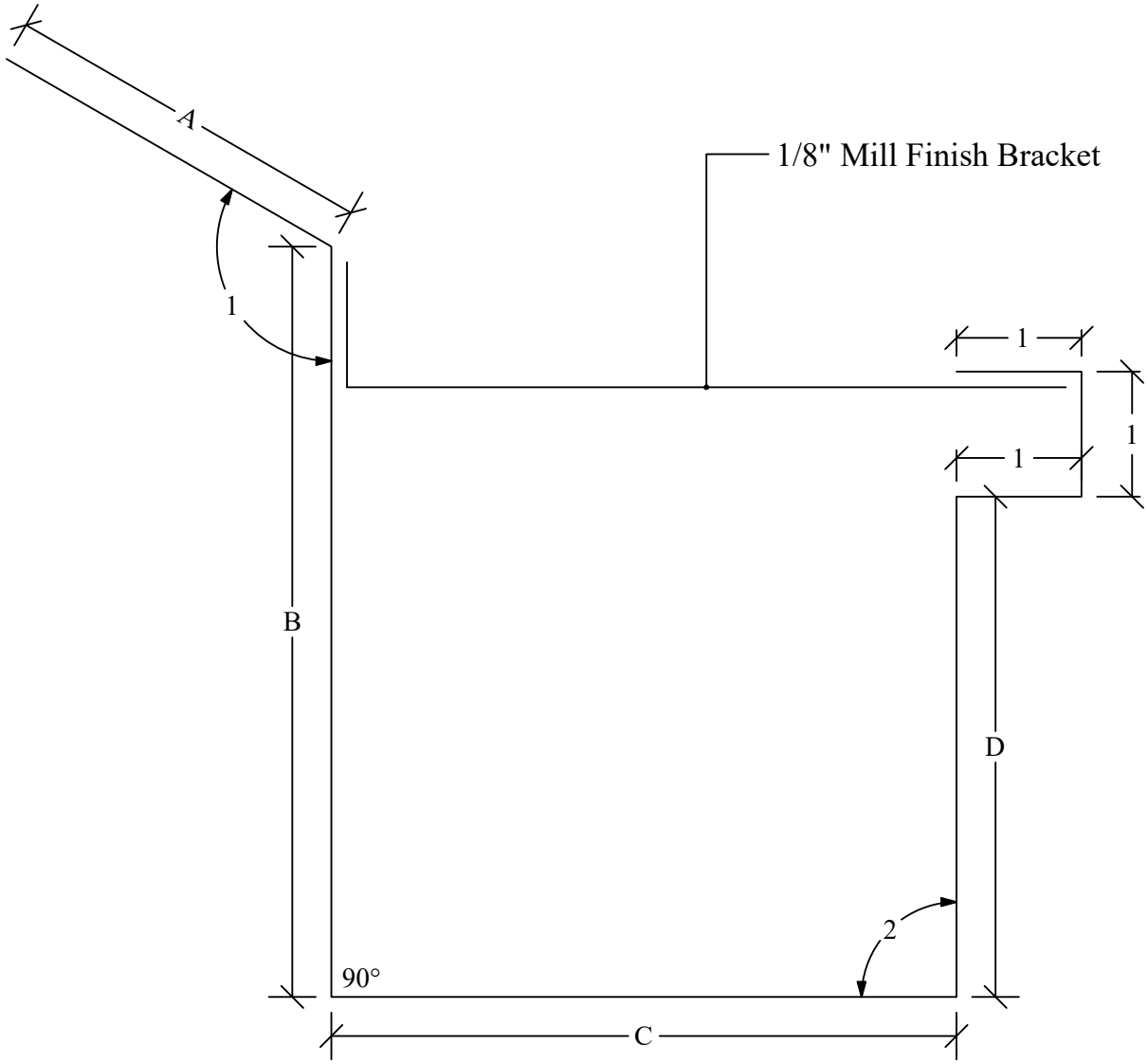

ALL DIMENSIONS ARE IN INCHES

CHENEY FLASHING
12100 Baltimore Ave.
Suite 4
Beltsville, MD 20705
Phone: (301) 931-2556
Fax: (301) 931-2559
info@cheneyflashing.com

REVISION	DESCRIPTION	DATE
00	RELEASE	

COMPANY:

PROJECT:

ARCHITECT:

MATERIAL:			SCALE: N.T.S.
DRAWN BY: JMW	APPROVED BY:	QUOTE #:	PURCHASE ORDER #:
DETAIL/PROFILE/PART #(S): GUTTER		TYPE: ROOFING	
FILE NAME: Gutter		REV: 00	SHEET: 01